12s-8-12

Name: 12s-8-12
Type: Butterfly control valves
Subtype: Medium parameters valves
Operating medium: air-gas
Body material: 20

DESCRIPTION:

Butterfly control valves have shutoff and control disk shaped device turning about an axis at a required angle to the direction of controlled fluid flow. Also these valves can be called as paddle valve , butterfly gate, hermetic valve, hermetically sealed valve, sealed valve. Butterfly control valves are widely used as isolation valves with respect to big diameter pipelines, low pressure and nonstrict requirements for operating device leaktightness.

TECHNICAL DATA:

Diameter, DN: 1100 mm
Pressure, PN: 0.1 MPa
Temperature: 400 СЛЪ
Maximum pressure differential: 0.1 MPa
Discharge rate (Kv100): 81500 m3/h
Rotational moment on the shaft: 1600 Ngm
Operating stroke: 0.25 mm

DIMENSIONS:

D1: 1110 mm
D2: - mm
D3: - mm
L: 240 mm
H: 1383 mm
Weight: 246 кг

ACTUATOR:

Control type: P
Actuator model: МЭО-4000/63-0,25У-97К У2
Actuator power: 0.32 kW
Full stroke time: 41 s

Tel.: +7 (3852) 390 - 530
info@russol.org

DIMENSIONAL DRAWING:

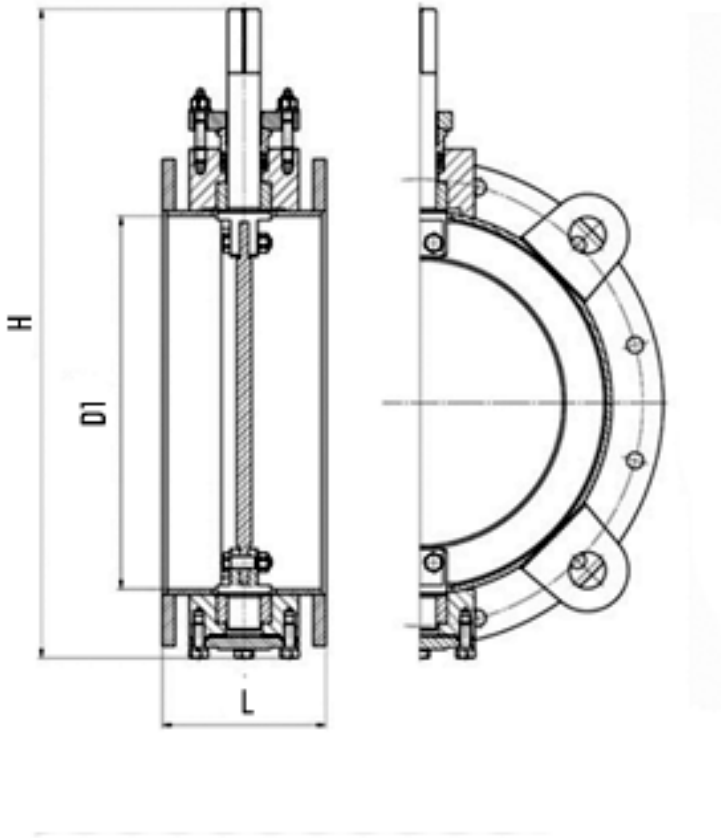

Tel.: +7 (3852) 390 - 530
info@russol.org