1197-65-r

Name: 1197-65-r
Type: Control and throttle valves
Subtype: High parameters valves
Operating medium: steam
Body material: 12Х1МФ

DESCRIPTION:

Control valves are the most used valve type designed for continuous or discrete adjustment of flow and pressure.

TECHNICAL DATA:

Diameter, DN: 65 mm
Pressure, PN: 9.8000000000000007 MPa
Temperature: 540 C
Maximum pressure differential: крит. MPa
Discharge rate (Kv100): 29 m3/h
Rotational moment on the shaft: [3300] Ngm
Number of revolutions: -
Operating stroke: 25 mm

DIMENSIONS:

D1 (D3): 62 mm
D2 (D4): 80 mm
L: 250 mm
H: 536 mm
A: 95 mm
Weight: 37 кг

ACTUATOR:

Control type: P
Actuator model: МЭО-1600/25-0,25У-92К У2
Actuator power: 0.32 kW
Full stroke time: 10 s

DIMENSIONAL DRAWING:

Tel.: +7 (3852) 390 - 530
info@russol.org

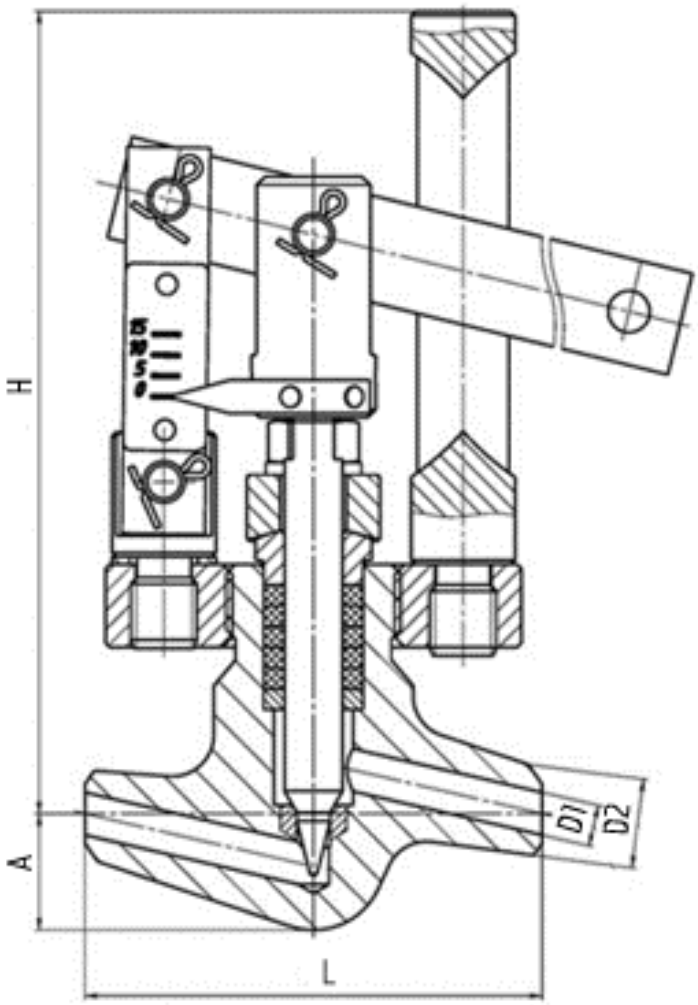

Tel.: +7 (3852) 390 - 530
info@russol.org