# 1521-50-r-01

**Name:** 1521-50-r-01
**Type:** Control and throttle valves
**Subtype:** High parameters valves
**Operating medium:** water-steam
**Body material:** 20

DESCRIPTION:

Control valves are the most used valve type designed for continuous or discrete adjustment of flow and pressure.

TECHNICAL DATA:

Diameter, DN: 50 mm
Pressure, PN: 10 MPa
Temperature: 450 C
Maximum pressure differential: 1 MPa
Discharge rate (Kv100): 5,75...10,25 m3/h
Rotational moment on the shaft: [600] Ngm
Number of revolutions: -
Operating stroke: 30 mm

DIMENSIONS:

D1 (D3): 50 mm
D2 (D4): 58 mm
L: 240 mm
H: 226 mm
A: 68 mm
Weight: 8.3 кг

ACTUATOR:

Control type: P
Actuator model: МЭО-250/25-0,25У-99К У2
Actuator power: 0.26 kW
Full stroke time: 15 s

DIMENSIONAL DRAWING:


Tel.: +7 (3852) 390 - 530
info@russol.org

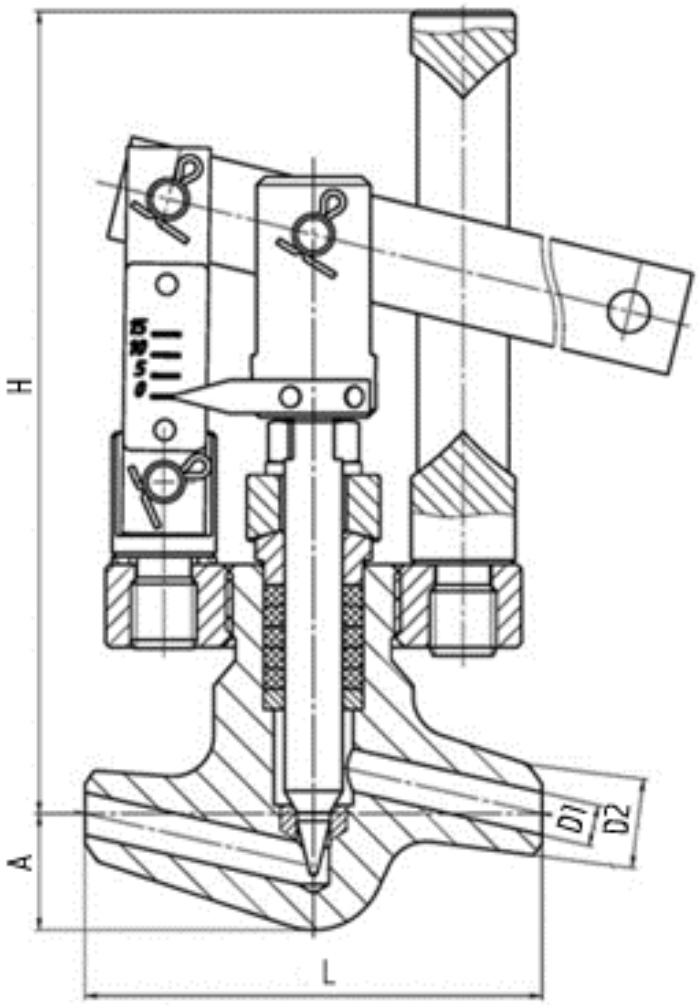




Tel.: +7 (3852) 390 - 530
info@russol.org