2s-31-1es

Name: 2s-31-1es
Type: Gate valves -2s type
Subtype: Medium parameters valves
Operating medium: water-steam
Body material: 20ГСЛ

DESCRIPTION:

Gate valves are designed for water and steam lines leak-free shutoff. These valves can be applied only for full valve opening or shutoff. Gate valves can’t be used as control valves

TECHNICAL DATA:

Diameter, DN: 80 mm
Pressure, PN: 9.9 MPa
Temperature: 450 C
Hydraulic resistance coefficient: 1
Rotational moment on the shaft: 200 Ngm
Number of revolutions: 15.4
Operating stroke: 92 mm

DIMENSIONS:

D1: 77 mm
D2: 90 mm
L: 350 mm
H: 1209 mm
A: 103 mm
Weight (w/o actuator): 75 kg
Weight (with actuator): 142 kg

ACTUATOR:

Control type: Э
Actuator model: Sipos 2SA5053-3DE00-3AA4
Actuator power: 5.5 kW
Full stroke time: 31 s

DIMENSIONAL DRAWING:

Tel.: +7 (3852) 390 - 530
info@russol.org

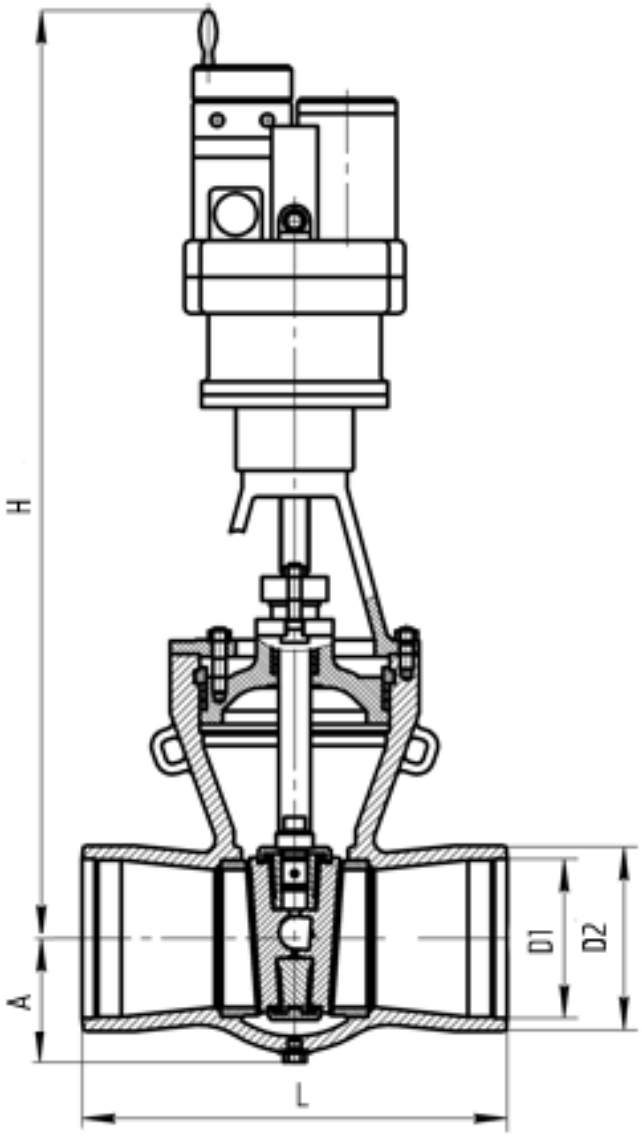

Tel.: +7 (3852) 390 - 530
info@russol.org