880-250-kz

Name: 880-250-kz
Type: Gate valves
Subtype: High parameters valves
Operating medium: water
Body material: 20ГСЛ

DESCRIPTION:

Gate valves are designed for water and steam lines leak-free shutoff. These valves can be applied only for full valve opening or shutoff. Gate valves can’t be used as control valves

TECHNICAL DATA:

Diameter, DN: 250 mm
Pressure, PN: 37.299999999999997 MPa
Temperature: 280 C
Hydraulic resistance coefficient: 0.9
Rotational moment on the shaft: 3900 Ngm
Number of revolutions: 24.5
Operating stroke: 245 mm

DIMENSIONS:

D1: 245 mm
D2: 345 mm
L: 900 mm
H: 1417 mm
A: 242 mm
Weight (w/o actuator): 1608 kg
Weight (with actuator): 1904 kg

ACTUATOR:

Control type: K
Actuator model: Редуктор 3:1
Actuator power: - kW
Full stroke time: - s

DIMENSIONAL DRAWING:

Tel.: +7 (3852) 390 - 530
info@russol.org

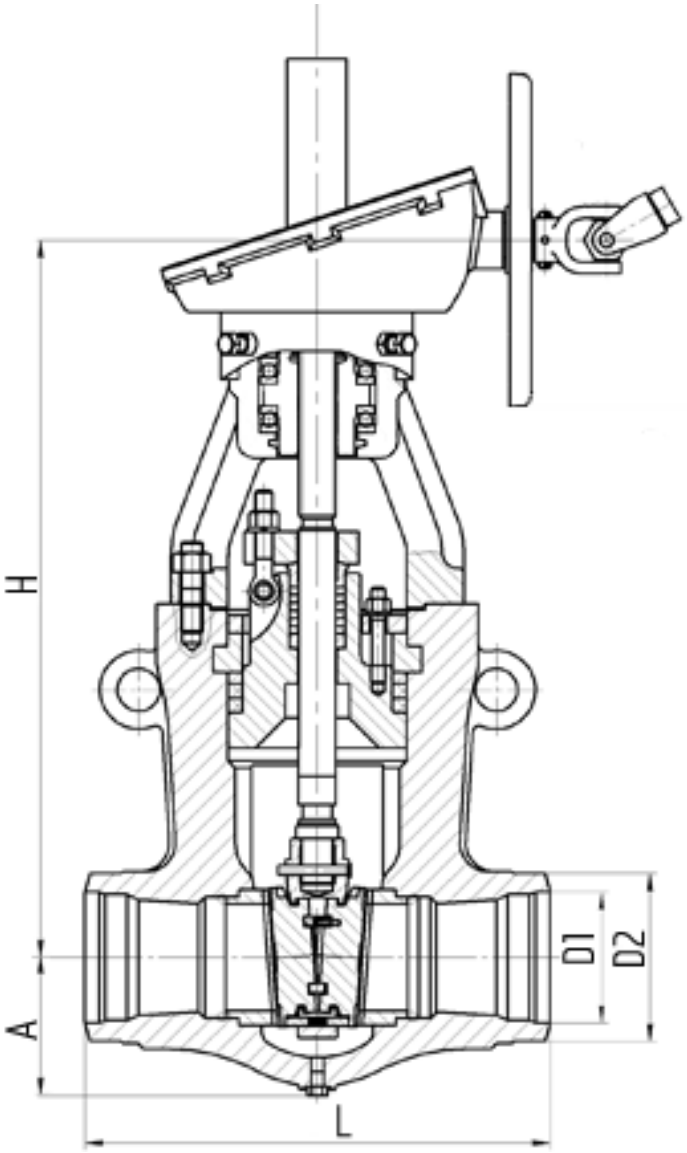

Tel.: +7 (3852) 390 - 530
info@russol.org