FDFB-25x2U

Name: FDFB-25x2U
Russian name: ВДН-25х2У
Type: Double inlet centrifugal FD fans of FDFB type
Notes: Backward curved blades

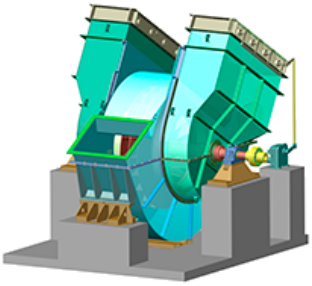

DESCRIPTION:

Double inlet centrifugal FD Fans are designed for air delivery into combustion chambers of pressure-fired boilers with the capacity of up to 2500 t/h. High-pressure FD Fans overcome full resistance of air-gas flow path. Double inlet centrifugal FD Fans can have right-hand or left-hand rotational direction. The right-hand rotation is in a clockwise order and it should be defined at electric motor side. The blades of impeller are backward curved.

AERODYNAMIC PERFORMANCE:

Capacity: 300.0 ths. m3
Total pressure: 4640 Pa
Temperature: 100 C
Efficiency: 86 %
Dustiness: 0.1 g/m3

DIMENSIONS:

Length: 6916 mm
Width: 4450 mm
Height: 5235 mm
Weight: 24560 kg

ELECTRIC MOTOR:

Power: 500 kW
Rate speed: 750 rpm
Moment of inertia: 2334 kg*m2

AUXILIARIES:
Actuator: 1600 Нм

DELIVERY OPTIONS:
Railway: Flatcar: 3 | Open wagon: 0 | Schnabel car: 0

Tel.: +7 (3852) 390 - 530
info@russol.org

DIMENSIONAL DRAWING:

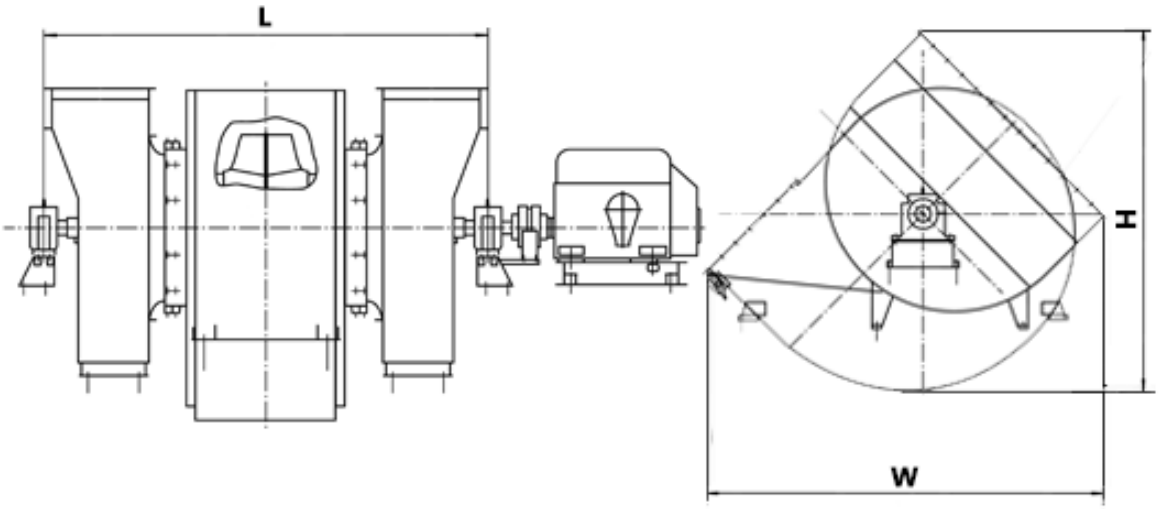

Tel.: +7 (3852) 390 - 530
info@russol.org