FDFB-8-1500

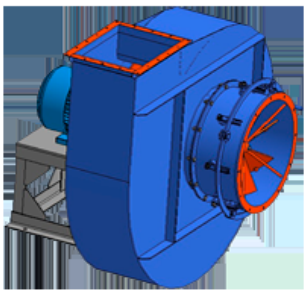

Name: FDFB-8-1500
Russian name: ВДН-8-1500
Type: Single inlet centrifugal FD fans of FDFB type
Notes: Backward curved blades. Running wheel on the electric motor shaft.

DESCRIPTION:

Single inlet centrifugal FD Fans are used for air delivery into combustion chambers of boilers with the capacity of 2.5- 950 t/h operating with balanced draft (secondary blast). It is allowed to use these fans in processing systems to handle air with the temperature not more than 70 °C. Single inlet centrifugal FD Fans can have right-hand or left-hand rotational direction. The right-hand rotation is in a clockwise order and it should be defined at electric motor side. The blades of impeller are backward curved.

AERODYNAMIC PERFORMANCE:

Capacity: 10.5 ths. m3
Total pressure: 2230 Pa
Temperature: 30 C
Efficiency: 83 %
Dustiness: 0.1 g/m3

DIMENSIONS:

Length: 1360 mm
Width: 1825 mm
Height: 1485 mm
Weight: 523 kg

ELECTRIC MOTOR:

Power: 15 kW
Rate speed: 1500 rpm
Moment of inertia: 6,65 kg*m2

AUXILIARIES:
Actuator: 100 Нм

DELIVERY OPTIONS:

Tel.: +7 (3852) 390 - 530
info@russol.org

Railway: Flatcar: 1 | Open wagon: 0 | Schnabel car: 0

DIMENSIONAL DRAWING:

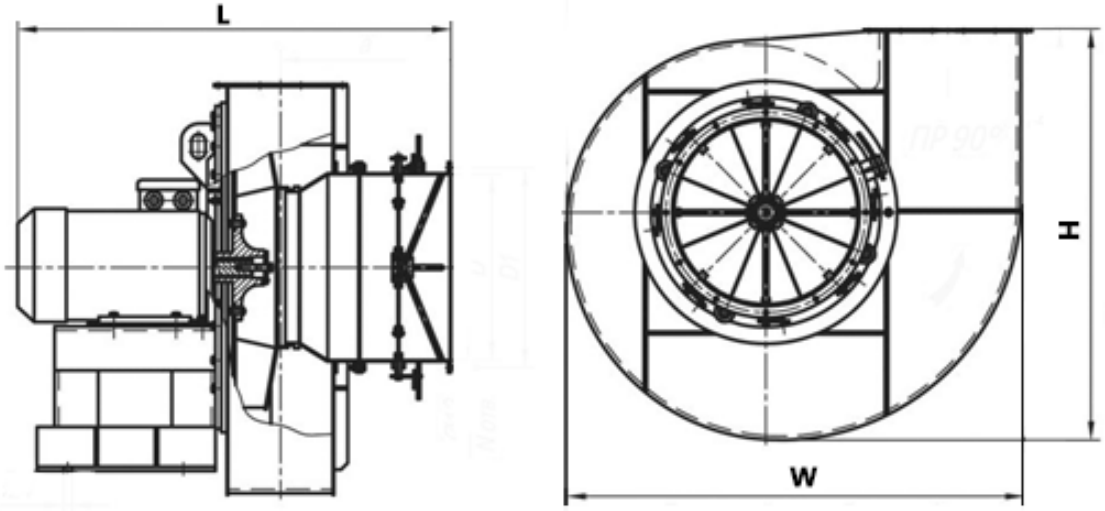

Tel.: +7 (3852) 390 - 530
info@russol.org