www.russol.org

IDF-3.5-400

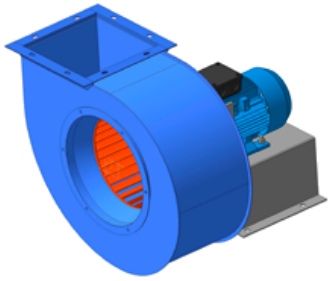

Name: IDF-3.5-400
Russian name: Д-3,5-400
Type: Single inlet centrifugal ID fans of IDF type
Notes: Forward curved blades. Running wheel on the electric motor shaft.

DESCRIPTION:

Single inlet centrifugal ID Fans with impeller diameter of 0.35 m are designed for flue gas removal from combustion chambers of 1 t/h steam boilers operating with balanced draft and without ash catchers. The main units of these Fans are: running wheel, scroll casing, electric motor and base.

AERODYNAMIC PERFORMANCE:

Capacity: 4.3 ths. m3
Total pressure: 450 Pa
Temperature: 400 C
Efficiency: 63 %
Dustiness: 2.0 g/m3

DIMENSIONS:

Length: 705 mm
Width: 585 mm
Height: 690 mm
Weight: 64 kg

ELECTRIC MOTOR:

Power: 3 kW
Rate speed: 1500 rpm
Moment of inertia: н/д kg*m2

AUXILIARIES:
Actuator: н/д Нм

DELIVERY OPTIONS:
Railway: Flatcar: 1 | Open wagon: 0 | Schnabel car: 0

DIMENSIONAL DRAWING:

Tel.: +7 (3852) 390 - 530
info@russol.org

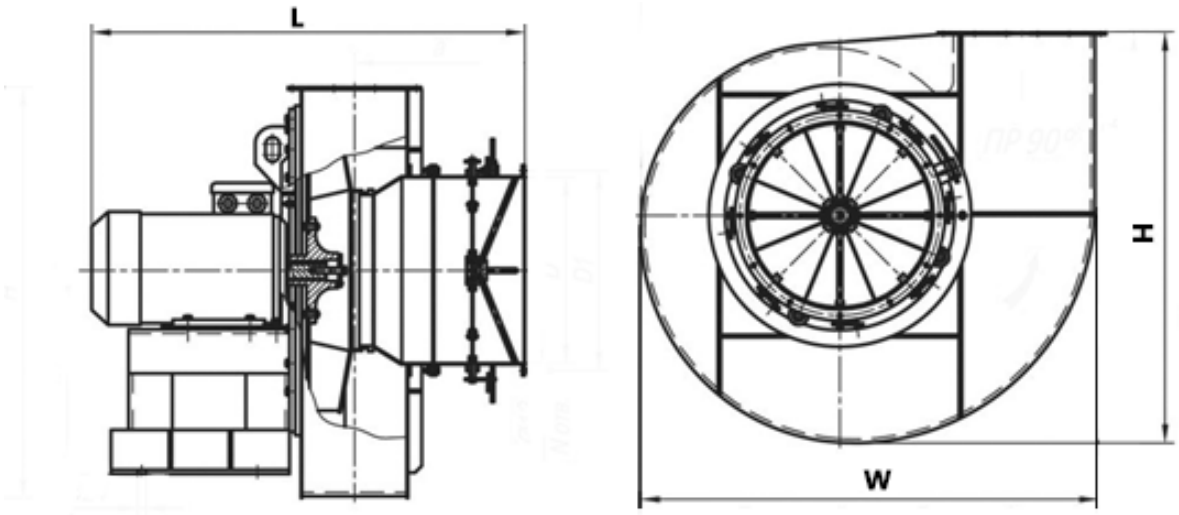

Tel.: +7 (3852) 390 - 530
info@russol.org