IDF-CR-21x2

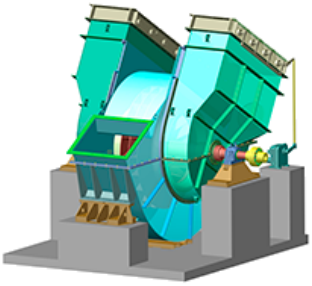

Name: IDF-CR-21x2
Russian name: ДРЦ-21x2
Type: ID Fans for cement industry
Notes: Radial blades

DESCRIPTION:

Double inlet centrifugal ID Fans for cement industry are designed for gas removal from rotating furnaces of cement clinker operation line. Double inlet centrifugal ID Fans for cement industry can have right-hand or left-hand rotational direction. The right-hand rotation is in a clockwise order and it should be defined at electric motor side. The main units of Double inlet centrifugal ID Fan are: running wheel, running gear, scroll casing, inlet boxes with louver guide vanes.

AERODYNAMIC PERFORMANCE:

Capacity: 440.0 ths. m3
Total pressure: 3158 Pa
Temperature: 250 C
Efficiency: 66,3 %
Dustiness: 30.0 g/m3

DIMENSIONS:

Length: 5950 mm
Width: 5600 mm
Height: 5100 mm
Weight: 12 070 kg

ELECTRIC MOTOR:

Power: 630 kW
Rate speed: 750 rpm
Moment of inertia: 1100 kg*m2

AUXILIARIES:
Actuator: 1600 Нм

DELIVERY OPTIONS:
Railway: Flatcar: 2 | Open wagon: 0 | Schnabel car: 0

Tel.: +7 (3852) 390 - 530
info@russol.org

DIMENSIONAL DRAWING:

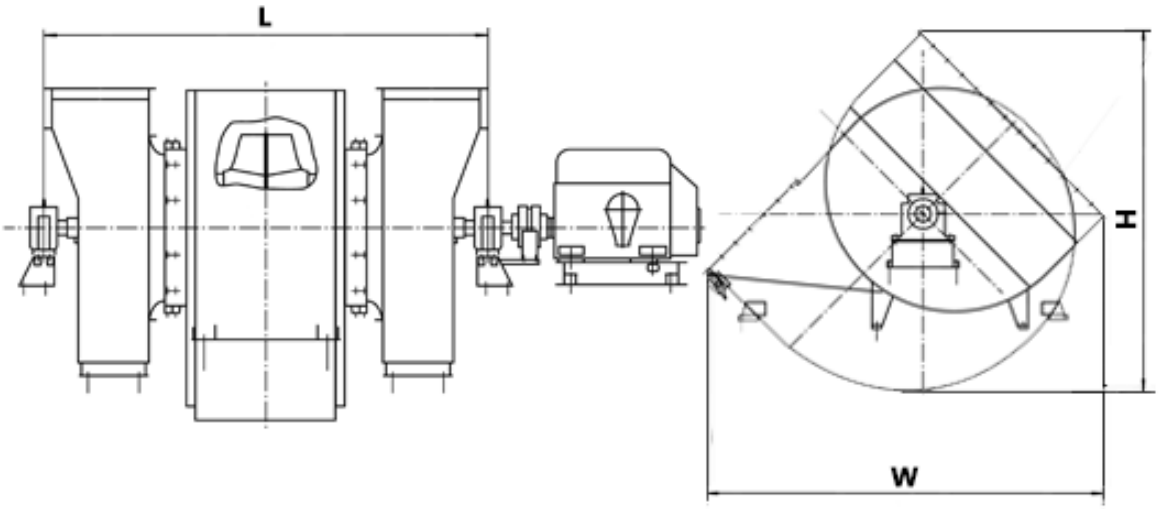

Tel.: +7 (3852) 390 - 530
info@russol.org