MPRF-100-50-9-E1-30

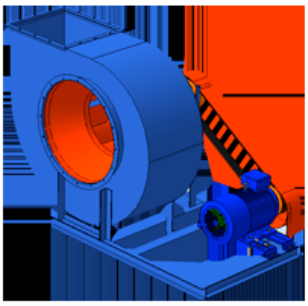

Name: MPRF-100-50-9-E1-30
Russian name: ВЦ 5-50 №9 Исп.1, 30 кВт
Type: Medium pressure radial fans
Notes: It is recommended to use vibration isolators of CVI-43 type in quantity of 5 pcs.

DESCRIPTION:

Medium pressure radial fans of MPRF-100-50 type are widely used in air ventilation systems, air conditioning and air heating systems of industrial and civil buildings, in pneumatic conveying systems of flour milling plants, and for other industrial and sanitary-engineering purposes. These medium pressure fans are manufactured in right-hand and left-hand rotations with backward curved blades. In accordance with the field of application these fans can be produced in the following modifications:

 - general purpose industrial modification (carbon steel)

 - corrosion-resistant modification (stainless steel)

 - explosion-proof modification (dissimilar metals)

 - corrosion-resistant modification (titanium alloys)

AERODYNAMIC PERFORMANCE:

Capacity: 37.5 ths. m3
Total pressure: 3300 Pa
Temperature: 80 C
Efficiency: 68-86 %
Dustiness: 0.1 g/m3

DIMENSIONS:

Length: 1265 mm
Width: 1640 mm
Height: 1543 mm
Weight: 832 kg

ELECTRIC MOTOR:

Power: 30 kW
Rate speed: 1500 rpm
Moment of inertia: n/a kg*m2

Tel.: +7 (3852) 390 - 530
info@russol.org

AUXILIARIES:
Actuator: n/a Нм

DELIVERY OPTIONS:
Railway: Flatcar: 1 | Open wagon: 0 | Schnabel car: 0

DIMENSIONAL DRAWING:

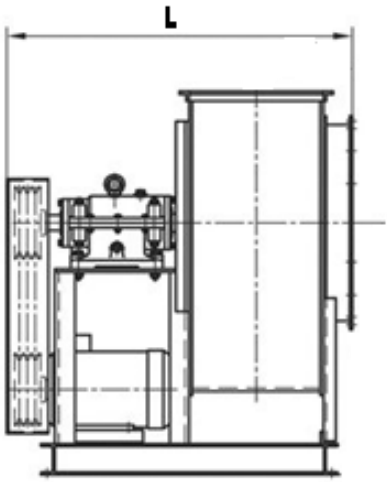

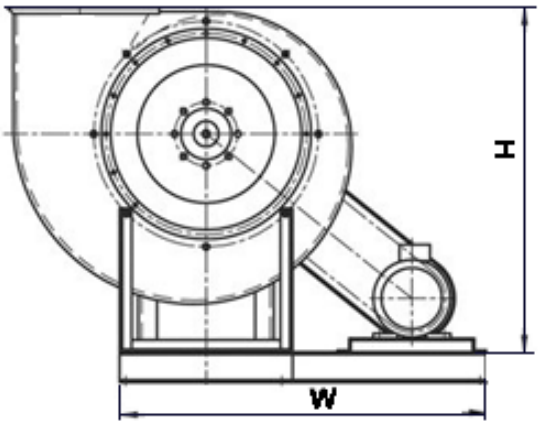

Tel.: +7 (3852) 390 - 530
info@russol.org